Honors Math II Name Key ID: 1

Review for Final #30

Date_____ Period____

State if the given angles are coterminal.

1) 125°, –485°

NO

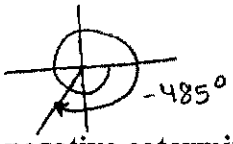

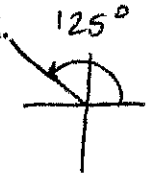

2) 40°, –320°

yes

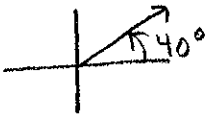

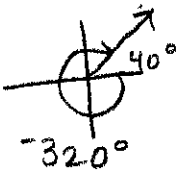

Find a positive and a negative coterminal angle for each given angle.

3) –165°

$-165° + 360 = 195°$

$-165° - 360 = 525°$

State the quadrant in which the terminal side of each angle lies.

4) –107°

III

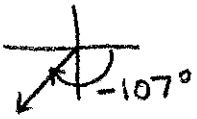

5) 520°

II

Find the reference angle.

6)

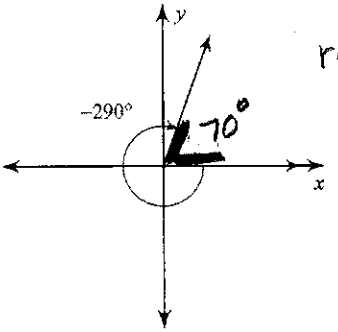

ref ∠ 70°

7)

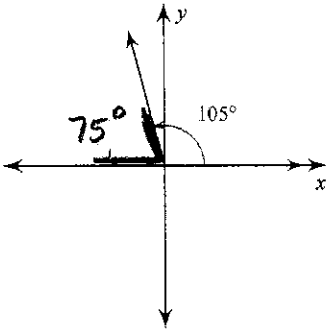

ref ∠ 75°

8)

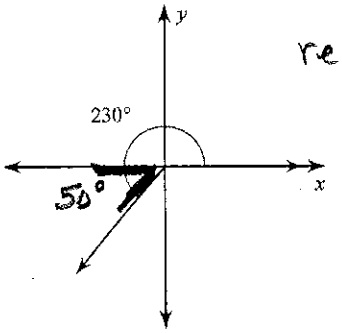

ref ∠ 50°

9)

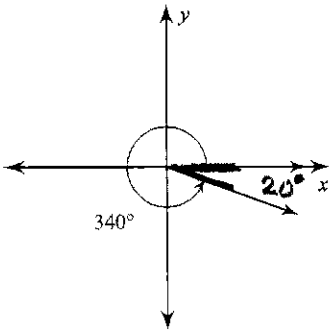

ref ∠ 20°

Convert each degree measure into radians and each radian measure into degrees.

10) $-285°\left(\pi/180°\right) = \frac{-19\pi}{12}$

11) $\frac{17\pi}{9}\left(\frac{180°}{\pi}\right) = 340°$

Use your unit circle and find the exact value of each trigonometric function.

12) $\cot\theta = -\sqrt{3}$

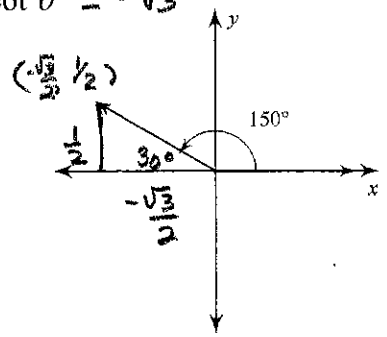

13) $\sin\theta = \frac{1}{2}$

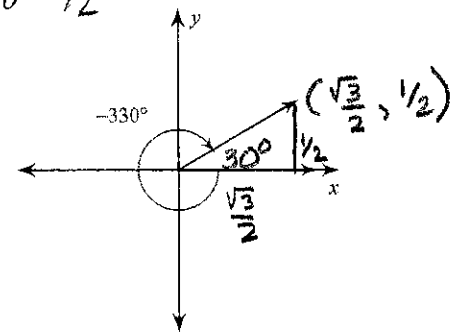

14) $\tan\theta = 1$

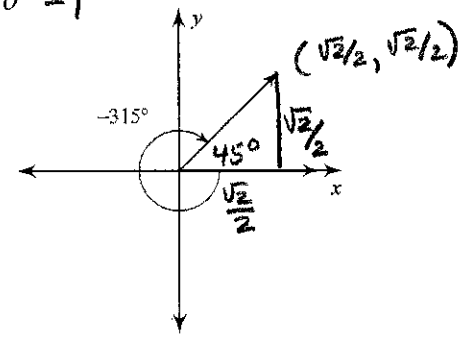

15) $\csc\theta = \frac{2\sqrt{3}}{3}$

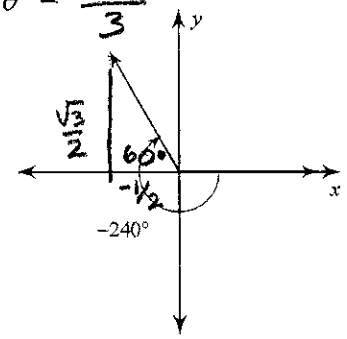

$\frac{1}{\frac{\sqrt{3}}{2}} = \frac{2}{\sqrt{3}}$

16) $\tan 330° = -\sqrt{3}/3$

17) $\sin 360° = 0$

18) $\cos(-135°) = -\frac{\sqrt{2}}{2}$

19) $\tan\pi = 0$

Solve each triangle. Round answers to the nearest tenth.

20)

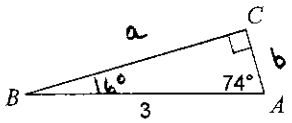

$\sin 74° = \frac{a}{3}$

$\boxed{a = 2.88}$

$\cos 74° = \frac{b}{3}$

$\boxed{b = .83}$

21) Given the following point. Graph and find all six trigonometric functions. State the reference angle.
(-4, -6)

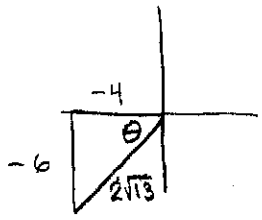

$\tan\theta = \frac{-6}{-4}$

$\theta = \tan^{-1}(-6/-4)$

$\theta = 56.3°$

ref $\angle = 56.3°$

$h^2 = (-4)^2 + (-6)^2$

$h = \sqrt{52} = 2\sqrt{13}$

$\sin\theta = \frac{-6}{2\sqrt{13}} = \frac{-3\sqrt{13}}{13}$

$\cos\theta = \frac{-4}{2\sqrt{13}} = \frac{-2\sqrt{13}}{13}$

$\tan\theta = -6/-4 = 3/2$

$\csc\theta = -\sqrt{13}/3$

$\sec\theta = -\sqrt{13}/2$

$\cot\theta = 2/3$

Find the length of each arc.

22)

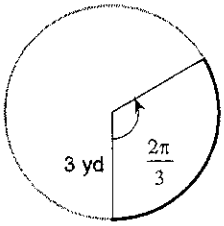

$S = r\theta$

$S = 3(2\pi/3)$

$S = 2\pi$ yd

≈ 6.28 yd

23)

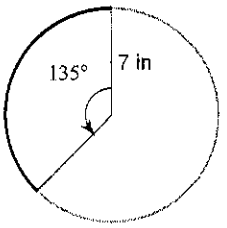

Arc length $= \frac{135°}{360°}(2\pi(7))$

$= \frac{3}{8}(14\pi)$

$= \frac{21\pi}{4}$ in

≈ 16.49 in.

Find the area of each sector.

24)

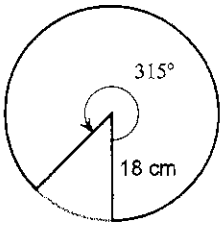

$A = \frac{315°}{360°}(\pi(18)^2)$

$A = \frac{567\pi}{2}$ cm^2

≈ 890.64 cm^2

25)

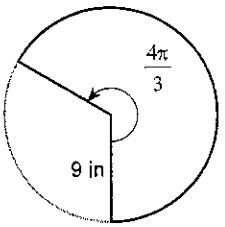

$A = \frac{1}{2}r^2\theta$

$A = \frac{1}{2}(9)^2(\frac{4\pi}{3})$

$A = 54\pi$ in^2

≈ 169.64 in^2

Using radians, find the amplitude and period of each function.

26) $y = 2\sin\left(\theta + \frac{7\pi}{4}\right)$

Amp: 2

period: $\frac{2\pi}{b} = \frac{2\pi}{1} = 2\pi$

27) $y = 2 + 9\cos\left(\theta + \frac{7\pi}{6}\right)$

amp: 9

period: $\frac{2\pi}{b} = \frac{2\pi}{1} = 2\pi$

Graph each function using radians.

28) $y = 2\cos\theta$

P: 2π

Amp: 2

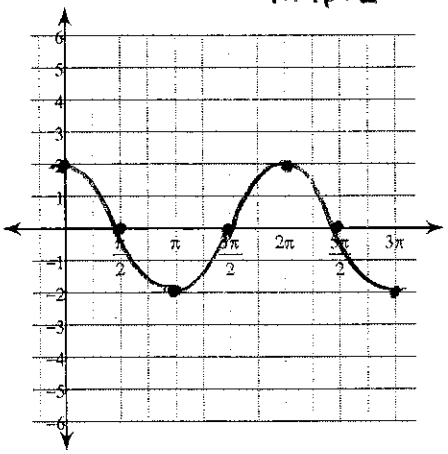

29) $y = \sin\frac{\theta}{4}$

Amp: 1

P: $\frac{2\pi}{1/4} = 8\pi$

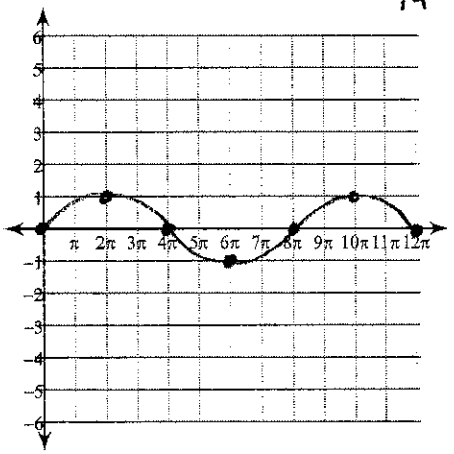

30) $y = 3\cos 2\theta + 2$

Amp : 3

P : $\frac{2\pi}{2} = \pi$

up 2.

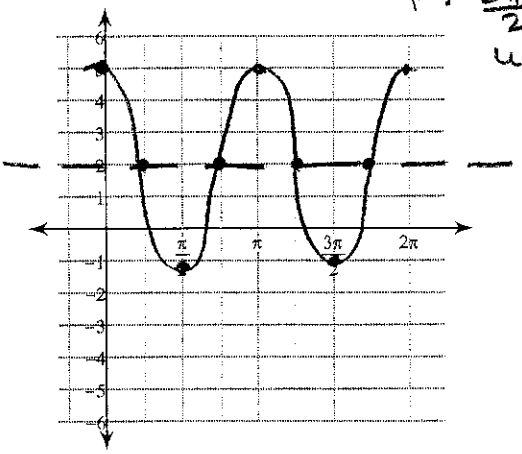

31) $y = -1 + 2\sin 4\theta$

amp : 2

P : $\frac{2\pi}{4} = \frac{\pi}{2}$

down 1

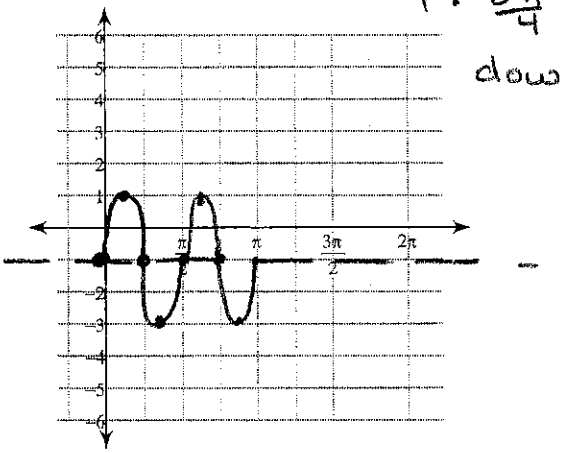

32) $y = 3\cos\left(\theta - \frac{3\pi}{4}\right) - 2$

amp : 3

P : 2π

R : $3\pi/4$

down 2

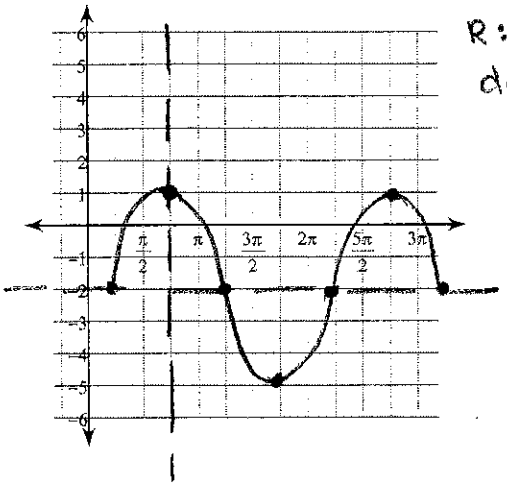

33) An aircraft approaching an airport descends with an angle of depression of 4°. If the horizontal distance from the airport is 2 km. How high is the aircraft at this point?

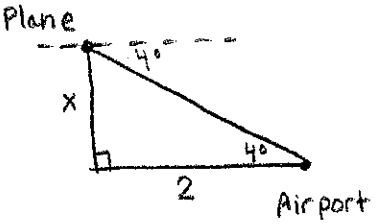

$\tan 4° = \frac{x}{2}$

$2\tan 4° = x$

$x = .14$ Km

Find the measure of the indicated angle to the nearest degree.

34)

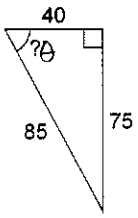

$\tan\theta = \frac{75}{40}$

$\tan^{-1}\left(\frac{75}{40}\right) = \theta$

$\theta = 61.9°$

35)

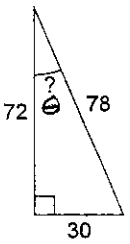

$\sin\theta = \frac{30}{78}$

$\sin^{-1}(30/78) = \theta$

$\theta = 22.6°$

36)

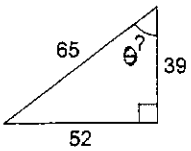

$\cos\theta = \frac{39}{65}$

$\cos^{-1}(39/65) = \theta$

$\theta = 53.1°$

37)

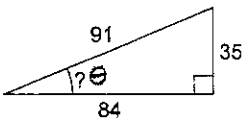

$\tan\theta = \frac{35}{84}$

$\tan^{-1}(35/84) = \theta$

$\theta = 22.6°$