Honors Math II

Name Key

ID: 1

Unit 9 Review

Date_____ Period____

State if the given angles are coterminal.

1) 30°, –330° yes

2) 175°, –185° yes

Find a positive and a negative coterminal angle for each given angle. Add & subtract 360°

3) –165° 195°, -525°

4) 195° 555°, -165°

State the quadrant in which the terminal side of each angle lies.

5) –107° III

6) 150° II

7) 520° II

8) –5° IV

Find the reference angle.

reference angle:
1 ray → x-axis
1 ray → terminal side
origin
acute
positive

9)

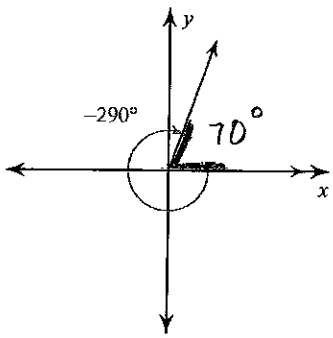

10)

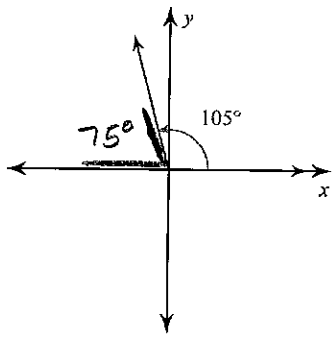

11)

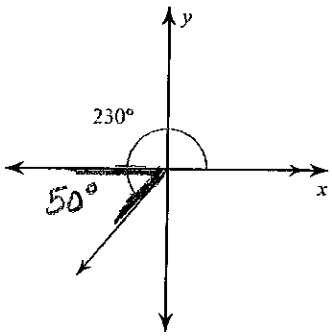

12)

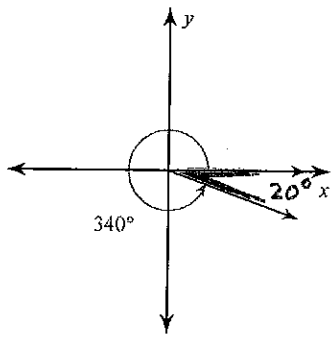

Convert each degree measure into radians and each radian measure into degrees.

13) $-285° \left(\frac{\pi}{180°}\right) = \frac{-19\pi}{12}$

14) $\frac{17\pi}{9} \left(\frac{180°}{\pi}\right) = 340°$

Use your unit circle and find the exact value of each trigonometric function.

15) cot θ

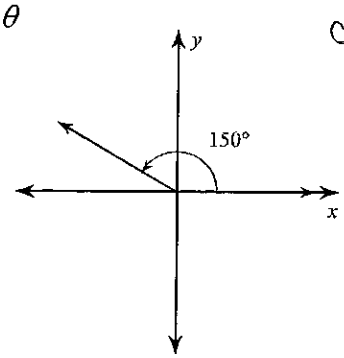

$\cot\theta = \frac{adj}{opp} = \frac{x}{y}$

$\frac{-\frac{\sqrt{3}}{2}}{\frac{1}{2}} = -\sqrt{3}$

16) sin θ

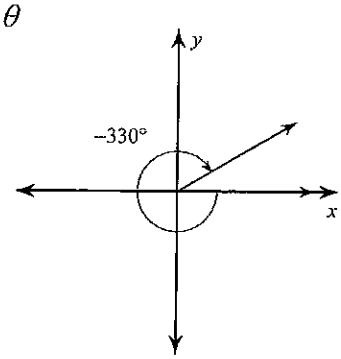

$= \frac{1}{2}$

17) tan θ

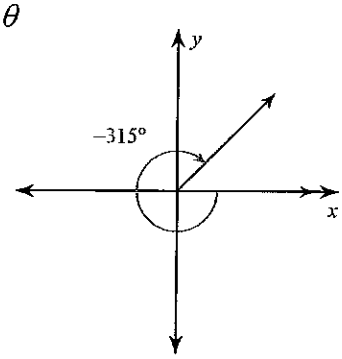

$\tan\theta = \frac{opp}{adj} = \frac{y}{x}$

$\frac{\frac{\sqrt{2}}{2}}{\frac{\sqrt{2}}{2}} = 1$

18) csc θ

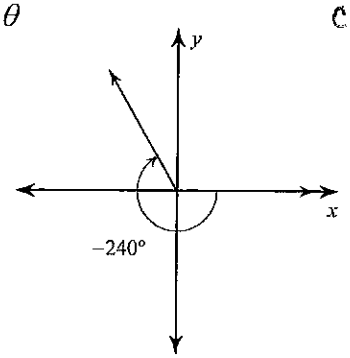

$\csc\theta$ is reciprocal of $\sin\theta$

$\csc\theta = \frac{2}{\sqrt{3}}\frac{\sqrt{3}}{\sqrt{3}}$

$= \frac{2\sqrt{3}}{3}$

19) tan 330° $\frac{-\frac{1}{2}}{\sqrt{3}/2} = \frac{-1}{\sqrt{3}} = \frac{-\sqrt{3}}{3}$

20) cot 270° $= \frac{0}{-1} = 0$

21) csc 210° $= -\frac{2}{1} = -2$

22) sin 360° $= 0$

23) cos (–135°) $= -\frac{\sqrt{2}}{2}$

24) sec 135° $= \frac{-2}{\sqrt{2}} = -\sqrt{2}$

25) cot $\frac{\pi}{6}$ $\frac{\frac{\sqrt{3}}{2}}{\frac{1}{2}} = \sqrt{3}$

26) tan π $\frac{0}{1} = 0$

Solve each triangle. Round answers to the nearest tenth.

27)

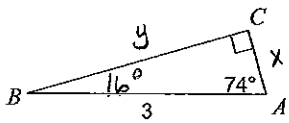

$\sin 74° = \frac{y}{3}$ $\cos 74° = \frac{x}{3}$

$y = 3\sin 74°$ $x = 3\cos 74°$

$y = 2.9$ $x = .8$

28)

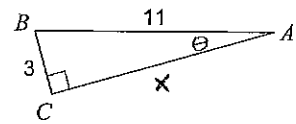

$\sin\theta = \frac{3}{11}$

$\sin^{-1}\left(\frac{3}{11}\right) = \theta$

$\theta = 15.8°$

$\angle A = 15.8°$

$\angle B = 74.2°$

$3^2 + x^2 = 11^2$

$9 + x^2 = 121$

$x^2 = 112$

$x = 4\sqrt{7} \approx 10.6$

29) Given the following point. Graph and find all six trigonometric functions. State the reference angle.
(-4, -6)

$(-4)^2+(-6)^2=h^2$

$h=\sqrt{52}$

$h=2\sqrt{13}$

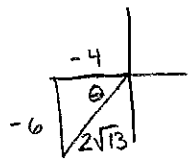

ref ∠ $\tan\theta=\frac{-6}{-4}$

$\tan^{-1}(-6/-4)=\theta$

$\theta=56.3°$

$\sin\theta=\frac{-6}{2\sqrt{13}}=\frac{-3}{\sqrt{13}}=\frac{-3\sqrt{13}}{13}$

$\tan\theta=\frac{-6}{-4}=\frac{3}{2}$

$\csc\theta=-\frac{\sqrt{13}}{3}$

$\cos\theta=\frac{-4}{2\sqrt{13}}=\frac{-2}{\sqrt{13}}=\frac{-2\sqrt{13}}{3}$

$\cot\theta=\frac{2}{3}$

$\sec\theta=-\frac{\sqrt{13}}{2}$

30) Given the following point. Graph and final all six trigonometric functions. Find the reference angle.
(6, -2)

$(6)^2+(-2)^2=h^2$

$h=\sqrt{40}$

$h=2\sqrt{10}$

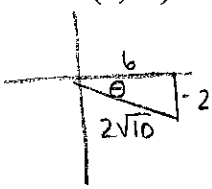

ref ∠ $\tan\theta=\frac{-2}{6}$

$\tan^{-1}(2/6)=\theta$

$\theta=18.4°$

$\sin\theta=\frac{-2}{2\sqrt{10}}=\frac{-1}{\sqrt{10}}=\frac{-\sqrt{10}}{10}$

$\tan\theta=\frac{-2}{6}=\frac{-1}{3}$

$\csc\theta=-\sqrt{10}$

$\cos\theta=\frac{6}{2\sqrt{10}}=\frac{3}{\sqrt{10}}=\frac{3\sqrt{10}}{10}$

$\cot\theta=-3$

$\sec\theta=\frac{\sqrt{10}}{3}$

Find the length of each arc.

31)

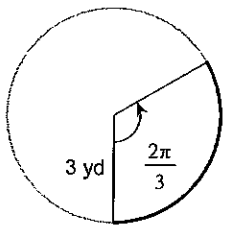

$S=r\theta$

$S=(3)\left(\frac{2\pi}{3}\right)$

$S=2\pi\approx 6.28$ yd

32)

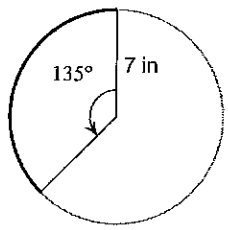

$135°\left(\frac{\pi}{180°}\right)=\frac{3\pi}{4}$

$S=r\theta$

$S=7\left(\frac{3\pi}{4}\right)$

$S=\frac{21\pi}{4}\approx 16.49$ in

Find the area of each sector.

33)

$315°\left(\frac{\pi}{180°}\right)$

$\frac{7\pi}{4}$

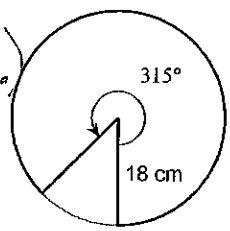

$A=\frac{1}{2}r^2\theta$

$A=\frac{1}{2}(18)^2\left(\frac{7\pi}{4}\right)$

$A=\frac{567\pi}{2}\approx 890.6\text{ cm}^2$

34)

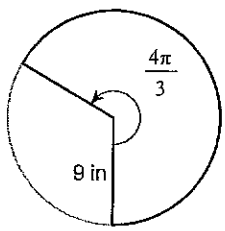

$A=\frac{1}{2}r^2\theta$

$A=\frac{1}{2}(9)^2\left(\frac{4\pi}{3}\right)$

$A=54\pi\approx 169.6\text{ in}^2$

Using radians, find the amplitude and period of each function.

35) $y=2\sin\left(\theta+\frac{7\pi}{4}\right)$

Amp: 2

period: 2π

36) $y=8\sin 4\theta-2$ (b)

Amp: 8

period: $\frac{2\pi}{b}=\frac{2\pi}{4}=\frac{\pi}{2}$

37) $y = 8\cos\left(\frac{\theta}{2} - \frac{\pi}{3}\right) + 1$

Amp: 8

period: $\frac{2\pi}{1/2} = 4\pi$

38) $y = 2 + 9\cos\left(\theta + \frac{7\pi}{6}\right)$

Amp: 9

Period: 2π

Graph each function using radians.

39) $y = 2\cos\theta$

Amp: 2

period: 2π

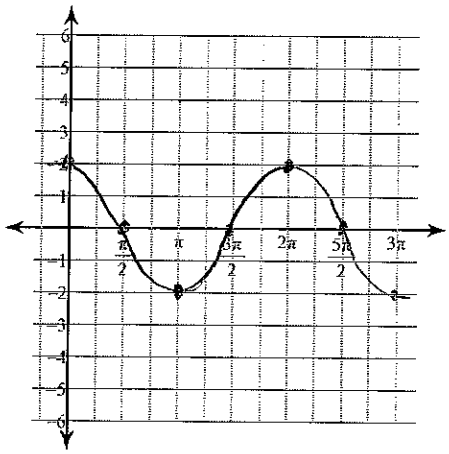

40) $y = 4\sin\theta$

Amp: 4

period: 2π

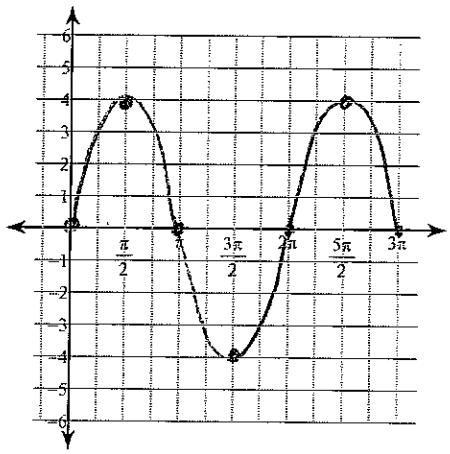

41) $y = \cos 2\theta$

Amp: 1

period: $\frac{2\pi}{2} = \pi$

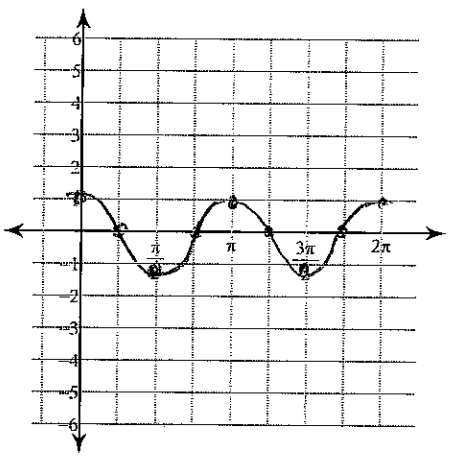

42) $y = \sin\frac{\theta}{4}$

Amp: 1

period: $\frac{2\pi}{\frac{1}{4}} = 8\pi$

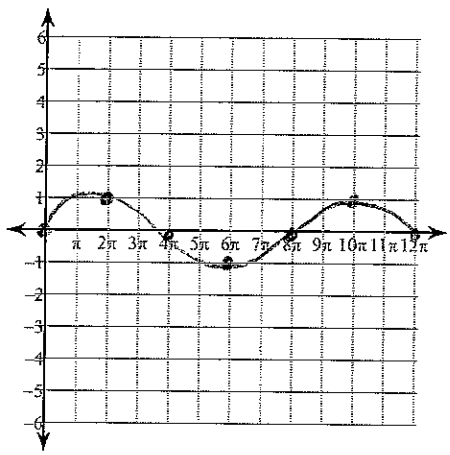

43) $y = 3\cos 2\theta + 2$ ← up 2

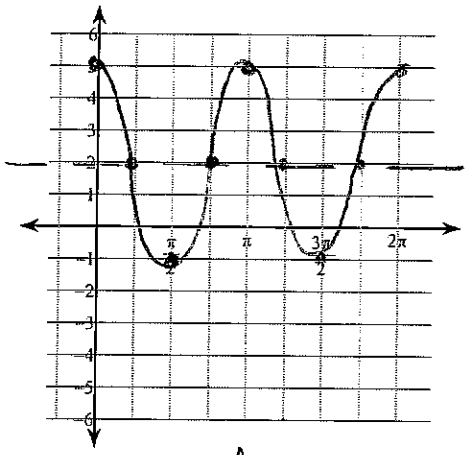

Amp : 3

Period : $\frac{2\pi}{2} = \pi$

44) $y = -1 + 2\sin 4\theta$ ← down 1

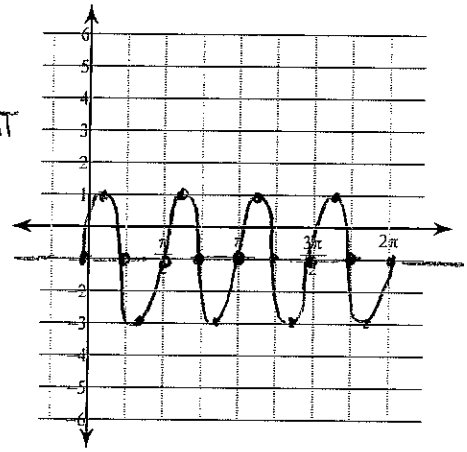

Amp : 2

period : $\frac{2\pi}{4} = \frac{\pi}{2}$

45) $y = -1 + \frac{1}{2} \cdot \sin\left(\theta - \frac{\pi}{2}\right)$ ← down 1 ← Right

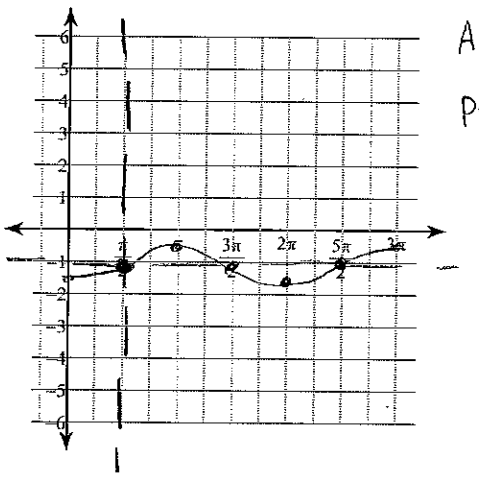

Amp : $\frac{1}{2}$

period : 2π

46) $y = 3\cos\left(\theta - \frac{3\pi}{4}\right) - 2$ ← down 2 ← Right

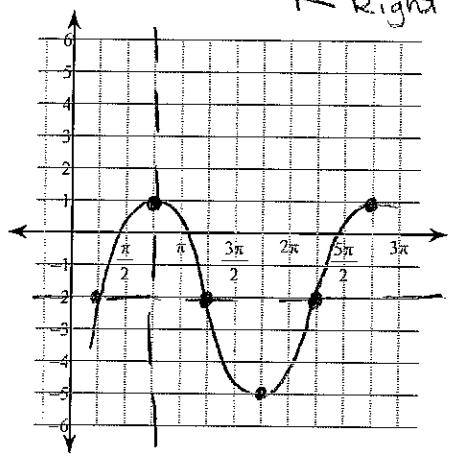

Amp : 3

period : 2π

47) An aircraft approaching an airport descends with an angle of depression of 4°. If the horizontal distance from the airport is 2 km. How high is the aircraft at this point?

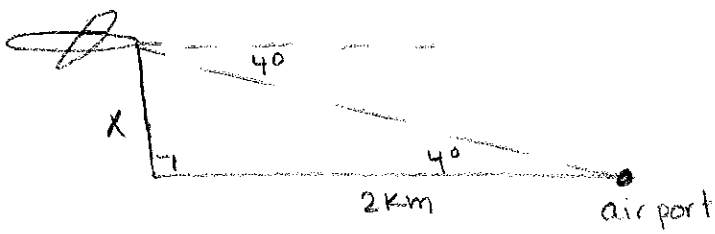

$\tan 4° = \frac{X}{2}$

$2 \tan 4° = X$

$X = .14$ Km

48) A building shadow is 98 meters long. The angle of elevation to the sun is 14.5°. How tall is the building?

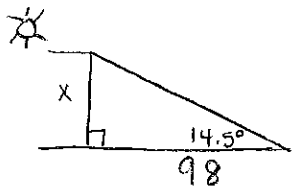

$\tan 14.5° = \frac{X}{98}$

$98 \tan 14.5° = X$

$X = 25.3$ m

1. Find x and y.

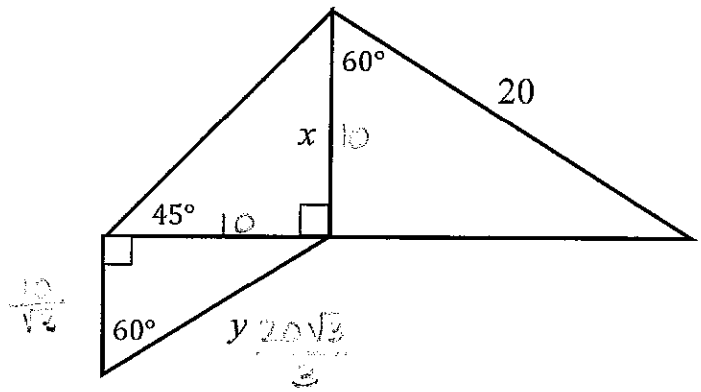

$x = 10$

$y = \frac{20\sqrt{3}}{3}$

2. The lower base angles in the isosceles trapezoid each measure 45°. The length of the shorter base is 10 inches and the altitude is 8 inches. Find the length, in inches, of the longer base.

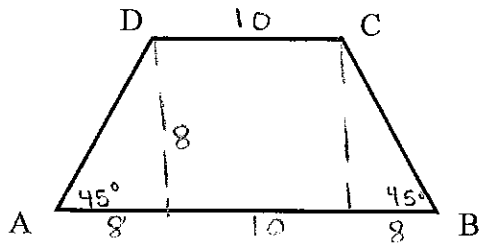

longer base = 26 inches

3. Given the picture below, find the lengths of the segments labeled *x*, *y*, *z* and *q*.

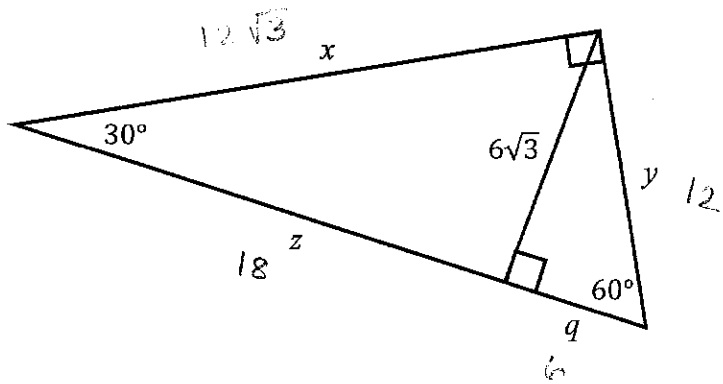

4. A man is walking his dog on level ground in a straight line with the dog's favorite tree. The angle of elevation from the man's present position to the top of a nearby telephone pole is 30°. The angle of elevation from the tree to the top of the telephone pole is 45°. If the telephone pole is 40 feet tall, how far is the man with the dog from the tree? Express answer to the nearest tenth of a foot.

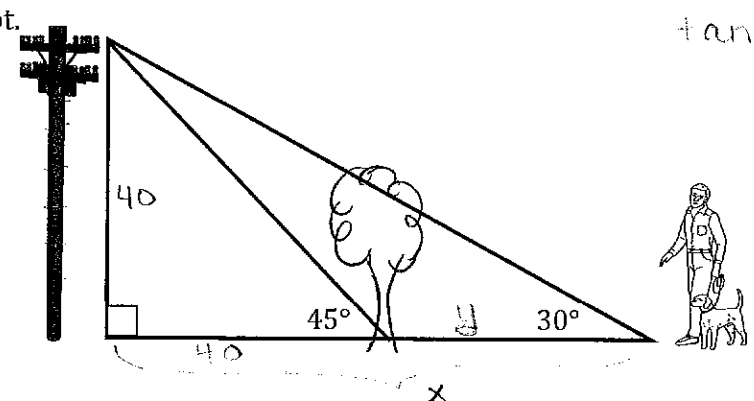

$\tan 30° = \frac{40}{x}$

$x = \frac{40}{\tan 30°}$

$x = 69.3$ ft

$y = 69.3 - 40 = \underline{29.3 \text{ ft}}$